QuikSign®

Change Signs in Seconds

Blanks Quickly Slide In and Out
and Stay Securely in Place

No Clips, Bolts, Latches or Added Parts

All Plastic – No Rust, No Splinters,
No Maintenance

Molded-in Handle Provides
Easy Portability

2 Signs per Unit

PUSH UP

Slides in easily, and...

SLIDE DOWN

...stays securely in place!

QuikSign®

- Change signs in seconds with no extra hardware. Once installed, signs stay securely locked in place.
- Won't tear or scratch car seat upholstery. Plastic is far more friendly than steel.
- High density polyethylene assures no rust, splinters, discoloration or maintenance.
- Attractive, light weight, durable and inexpensive.
- Molded-in handle assures easy portability.
- Molded-in regress helps protect sign faces.
- Display two signs per unit.
- Molded-in 'stacking lugs' nest into each other when units are stacked which prevents sliding.

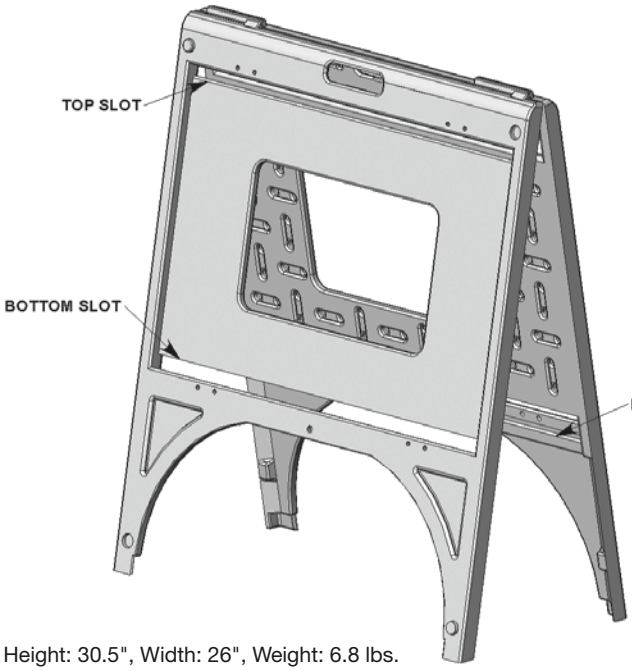

Height: 30.5", Width: 26", Weight: 6.8 lbs.
Sign Blank Size: 18" x 24"
Closed Thickness: 2"

High visibility! Slip in a new blank and you're ready to go!

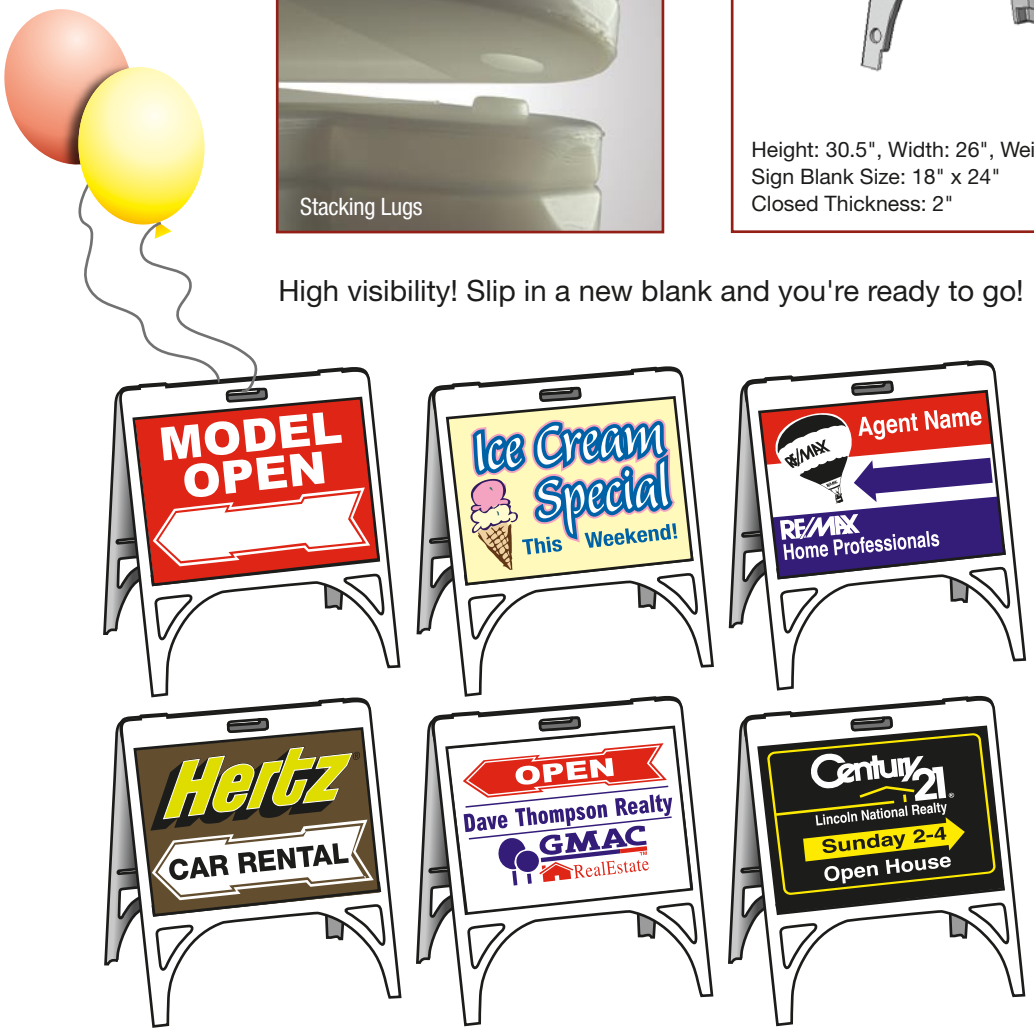

www.BestBlanks.com