COUNTER TOP SUBLIMATION OVEN

SubliPro-CT

Overview

The HIX SubliPro CounterTop oven provides an introductory alternative to mass production conveyor ovens for dye-sublimation printing on drink ware such as standard 11/15 oz mugs, travel mugs, shot glasses and pint glasses. It has a porcelain enamel on steel oven interior measuring 15¼"w x 21"d x 20"h for producing as many as 12-15 mugs per cycle or more than 48 per hour. The HIX SubliPro CounterTop comes furnished with nine position nickel plated rack guides and four nickel plated racks for a variety of substrates of varying heights and diameters. The oven chamber is heated by enclosed tubular heating elements rated at 7.5 KW with the air circulated by a two speed ⅓ H.P. permanently lubricated oven blower motor. The oven is enclosed with stainless steel front, sides, top and rear panels and has insulation applied to the top, rear, both sides, bottom as well as having an insulated stainless steel door with a double pane window. The SubliPro CounterTop comes with a solid state temperature controls adjustable from 200° to 500°F and a 60 minute electrical timer with continuous sounding buzzer. Requires 208/240 volt, 60 Hz, 1 or 3 phase supply.

Counter Top Sublimation Oven

Call Today 1-888-431-7385 or Visit Us Online www.BESTBLANKS.com

COUNTER TOP SUBLIMATION OVEN

SubliPro-CT

Specifications

Oven chamber	15¼"w x 21"d x 20"h
Total Watts	7.5KW
Amps/Line	(208V - 3P) 23_{L1}, 10_{L2}, 12_{L3}
Amps/Line	(240V - 3P) 20_{L1}, 9_{L2}, 11_{L3}
Amps/Line	(208V) 26
Amps/Line	(208V) 23

Fan power	1/3 H.P.
Oven width	30"
Oven depth	28½"
Oven height	29
Oven weight	218 lbs
Shipping Weight	250 lbs

Key Features:

- Stainless steel front, sides, top and rear enclosure panel.
- Stainless steel door with double pane window.
- Cool to the touch oven door handle.
- Stainless steel oven door gaskets.
- 7.5 KW input.
- Solid state temperature control adjusts from 200° to 500°F.
- 60 minute electric timer with time expired buzzer.
- 1⁄3 H.P. two speed fan motor.
- Oven cool switch for rapid cool down when door is open.
- Oven interior liners are porcelain on steel.
- Nine position rack guide with four nickel plated racks.

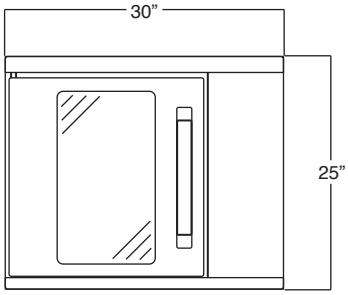

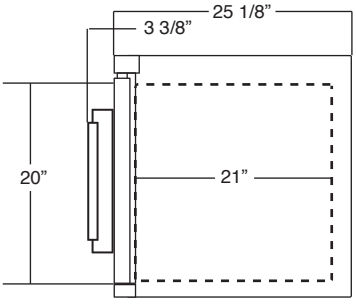

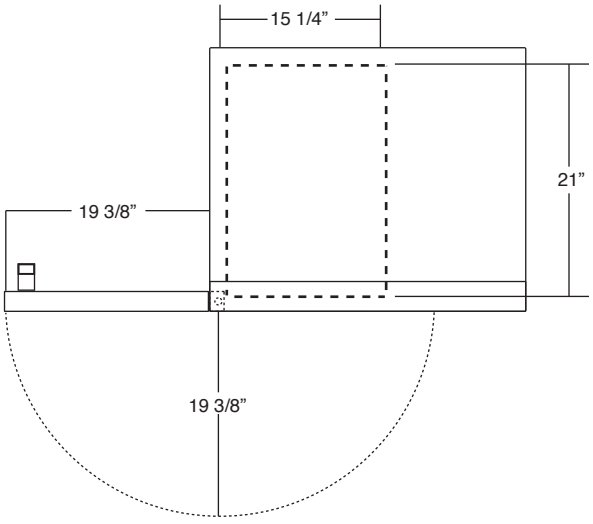

Made In U.S.A.

Call Today 1-888-431-7385 or Visit Us Online www.BESTBLANKS.com